ED1 INCREMENTAL RATORY ENCODER

■ FEATURES

- Easy installation, high-speed pulse generator, high-speed rotation control, and more.
- Φ 40diameter with high resolution up to 1024P/R.

■ APPLICATIONS

RPM and Linear line speed detection
Counting Control Gap Control

■ ORDERING INFORMATION

ED1– Connection Type – Cycles per Resolution – Output Phase – Output Configuration – Length of wire

CODE	CONNECT. TYPE
S	Shaft
H	Hollow

CODE	CPR	CODE	CPR
0100	100 CPR	0400	400 CPR
0200	200 CPR	0500	500 CPR
0250	250 CPR	0512	512 CPR
0300	300 CPR	1000	1000 CPR
0360	360 CPR	1024	1024 CPR

CODE	OUTPUT PHASE
A	Channel A
Q	Quadrature A & B
Z	A, B, Z

CODE	OUTPUT CONF.
N	NPN

CODE	LENGTH OF WIRE
10	Pre-wire 1.0 M
XX	Pre-wire X.X M(Specified)
PC	Plug In Connector
M12	M12 Connector

■ TECHNICAL SPECIFICATION

ITEM		ED1
ELECTRICAL		
Power supply voltage		DC 5 to 24 V (allowable range: 4.75 to 27.6 VDC)
Current consumption		80 mA max.
Resolution		100, 200, 250, 300, 360, 400, 512, 1000, 1024 P/R
Output phases		A, B, and Z
Output configuration		NPN open collector output; under 80mA
Output capacity		Applied voltage: 30 VDC max. Isink: 35mA max. Residual voltage: 0.4 V max. (Isink: 35mA max.)
Max. response frequency		50 kHz
Phase difference on output		90°±45° between A and B (1/4T±1/8T)
Rise and fall times of output		1 μs max. (control output voltage: 5 V; load resistance: 1 kΩ; cable length: 1 m)
Insulation resistance		100 MΩ min. (at 500 Vdc)
Dielectric strength		500 VAC, 50/60 Hz for 1 min between carry parts and case
MECHANICAL		
Shaft		Stainless steel; Shaft: 6.0 mm; Hollow: 6.0mm
Shaft loading	Radial	2 kgf (20.0 N)
	Axial	1 kgf (10.0 N)
Moment of inertia		1.0 x 10^{-5} Kg-m^2
Starting torque		2.0 x 10^{-3} Nm
Max. shaft speed		5000 rpm
Max. acceleration		1 x 10^4 rad/sec^2
Vibration resistance		50m/sec^2 @ 10~200Hz, X/Y/Z 3 direction for 2 hrs
Shock resistance		980m/sec^2 , X/Y/Z 3 direction for 2 times
ENVIRONMENTAL		
Ambient temperature		Operation: -10°C to 70°C; Storage: -20°C to 80°C
Ambient humidity		10% to 85% (with no condensation)
Protective circuit		Protection from load short-circuiting and power supply reverse polarity wiring
Protection		IEC IP64 (JEM IP64f drip-proof)
Pre-wired		5C / 3.8 Ø * 1M PVC; oil-resistant
Weight		Approx. 300 g max.
Materials	Case	ABS
	Fix holder	Aluminum

■ TIME CHART OF OUTPUT

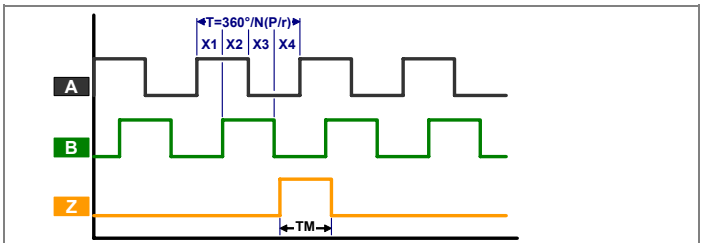

Duty Ratio: X1 + X2 = 0.5T ± 0.1T X3 + X4 = 0.5T ± 0.1T
Phase Differential: Xn > 0.125T (n = 1, 2, 3, 4)
Channel Z: 0.5T ± 0.5T
Progressive difference on Channel Z = 0.1T
Periodic difference on Channels A.B = 0.1T

■ DIMENSIONS

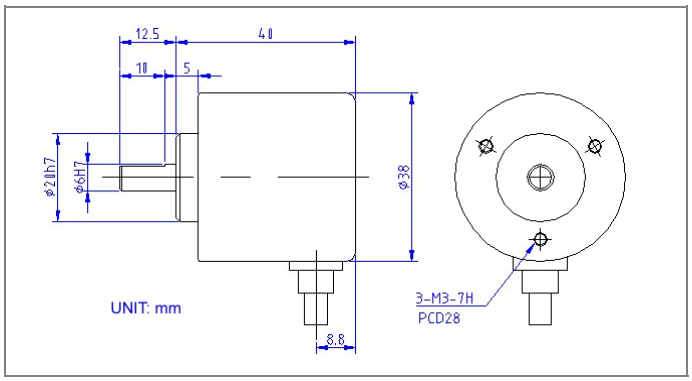

■ ASSESORY

Fix Holder

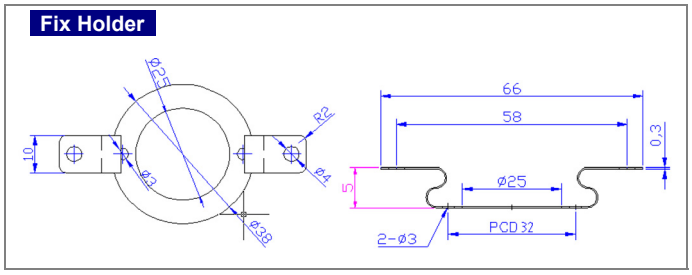

■ CONNNECTION OF OUTPUT

Output Configure: NPN

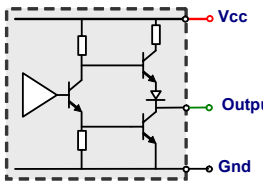

CONNECTION				
Red	Black	White	Green	Yellow
+	–	A	B	Z

I_{max} = 20mA

ED1 Encoder